CS466 Lab 2

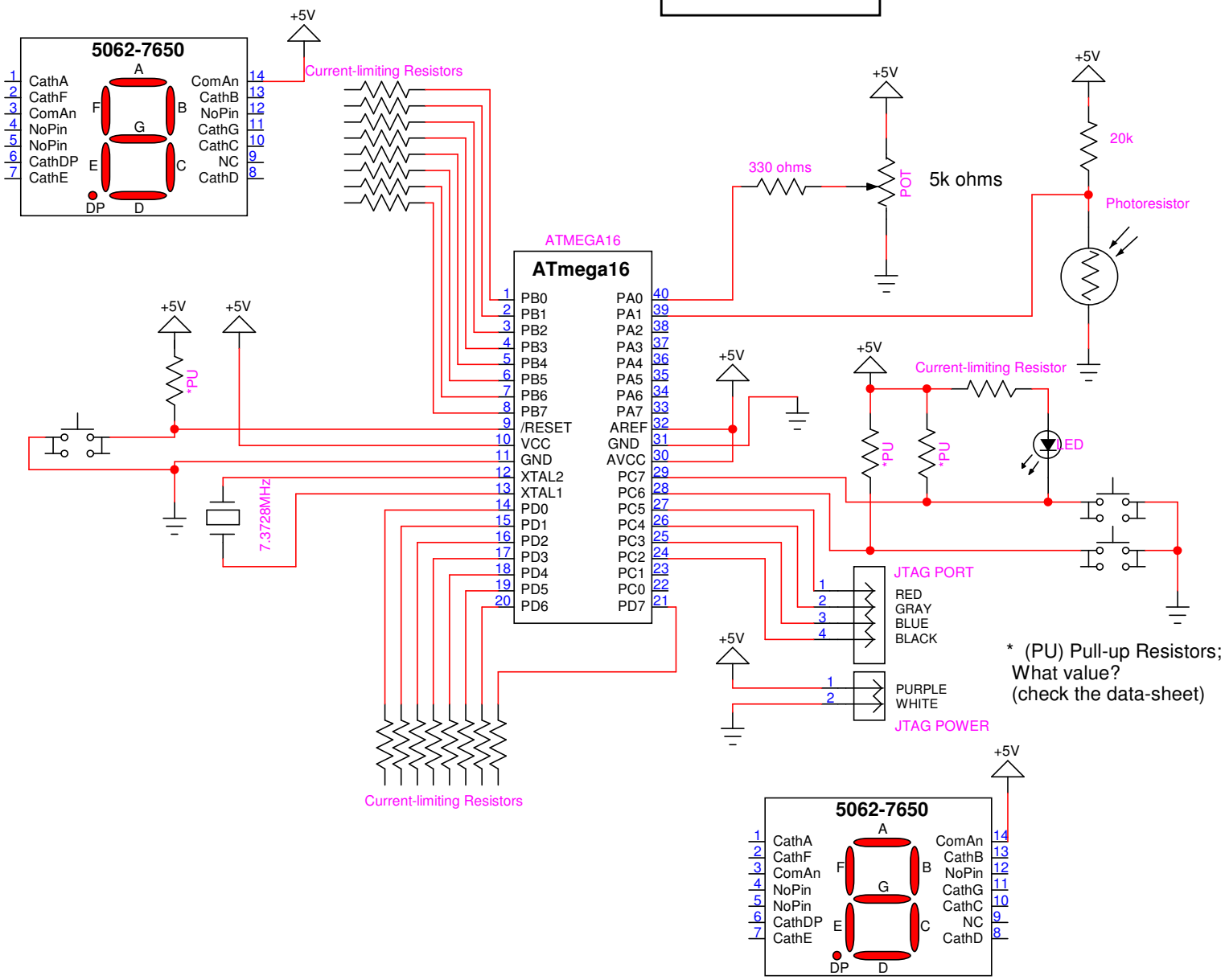
5062-7650
CathA
CathF
ComAn
NoPin
NoPin
CathDP
CathE
ComAn
CathB
NoPin
CathG
CathC
NC
CathD
A
B
C
D
E
F
G
DP
+5V
Current-limiting Resistors
ATMEGA16
ATmega16
PB0
PB1
PB2
PB3
PB4
PB5
PB6
PB7
/RESET
VCC
GND
XTAL2
XTAL1
PD0
PD1
PD2
PD3
PD4
PD5
PD6
PA0
PA1
PA2
PA3
PA4
PA5
PA6
PA7
AREF
GND
AVCC
PC7
PC6
PC5
PC4
PC3
PC2
PC1
PC0
PD7
330 ohms
POT
5k ohms
20k
Photoresistor
*PU
7.3728MHz
Current-limiting Resistor
LED
JTAG PORT
RED
GRAY
BLUE
BLACK
PURPLE
WHITE
JTAG POWER
* (PU) Pull-up Resistors;
What value?
(check the data-sheet)
Current-limiting Resistors
5062-7650
CathA
CathF
ComAn
NoPin
NoPin
CathDP
CathE
ComAn
CathB
NoPin
CathG
CathC
NC
CathD
A
B
C
D
E
F
G
DP